Hydraulic Vacuum Filters

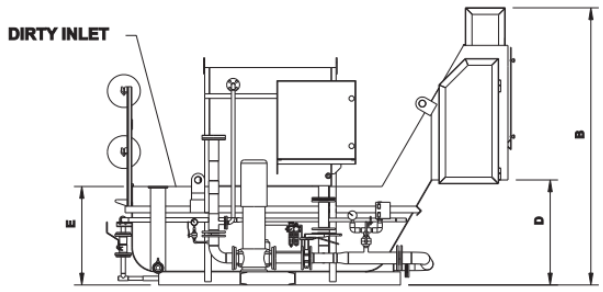

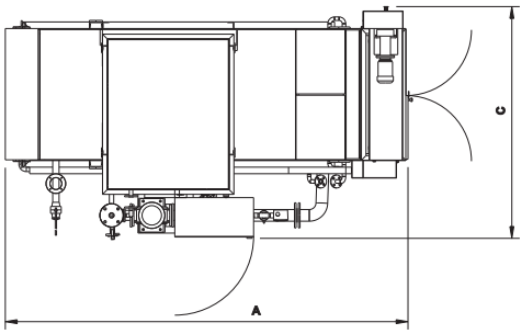

Working:

Hydraulic vacuum filter works on the pressure differential created due to suction of pump. This vacuum is less than the suction head available from the pump and is around 3 meters of fluid column. This pressure drop available enables better filtration. The filter consists of conveyorised dirty tank with inlet chute. The bottom of the tank forms the vacuum chamber. Filter Paper / Mesh (depending on clarity requirement) is laid between the conveyor and vacuum chamber. A perforated sheet & grill forms top of the vacuum chamber. This is to support the Filter media against vacuum force. A common drive placed at the exit end, moves the conveyor to index the dirty Filter paper and also rotates the winding arrangement. The dirt on the Filter paper is scraped off in the bin while the paper is wound on a mandrel. In case of filter mesh, the mesh is cleaned using clean fluid and air nozzles placed in the drive end. An actuator valve opens to start the flow in these nozzles.

A separate drive rotates an impactor shaft during conveyor indexing to clean the filter mesh. The vacuum chamber is connected to the pump suction, which is handling the fluid in the system. Small flow from outlet of this pump is diverted to the vacuum brake tank placed on the top. This tank continuously overflows in the dirty tank. The vacuum brake tank bottom is connected to the suction of pump through a pneumatically actuated valve, kept normally closed. Dirty fluid from the machine enters the tank through the inlet chute.

The pump suction connected to the vacuum chamber sucks this fluid through the filter paper laid on top. After the Filter Media is choked, a vacuum switch is activated. This opens the valve connecting vacuum brake tank to pump suction. The vacuum in the vacuum chamber is eliminated & the machine is also fed by this fluid.

Applications:

- Suitable for fine filtration of coolant used in grinding
- Steel Grinding
- Cast iron Grinding
- Honing
- Gun drilling
- Component washing
- Lapping in combination with Backwashable Candle Filter

Features:

- Better filtration is achieved by using lesser filter paper.
- Suitable for finer filtration. Paper consumption drops by 80%.
- Can be used with disposable and back-washable media.
- Filtration capacity: 100 l/min to 6000 l/min.
- Totally automatic operation.
- Compact Design.
- Can be used as individual or centralized.
- Can be handle more viscous fluid
- Can be customized to suit your requirement.
- Only clean fluid handled by pump.

Single Chamber Type Vacuum Filter:

ITEM CODE. H/V	MAX FLOW OIL LPM	MAX FLOW WBE LPM	A	B	C	D	E
A060V0060/30	100	200	2550	1950	1550	625	525
A060V0040/10	100	200	2625	2050	1550	725	625
A060V0050/20	100	200	2725	2250	1550	925	800
A06080070/40	150	300	2950	1950	1750	625	575
A06080050/20	150	300	3025	2070	1750	750	700
A06080060/30	150	300	3125	2250	1750	925	870
A06090070/40	200	400	3300	2000	1550	675	575
A06090050/20	200	400	3400	2175	1550	850	750
A06090060/30	200	400	3500	2350	1550	1000	900
A060A0080/50	250	500	3800	2075	1900	750	600
A060A0060/30	250	500	3925	2275	1900	950	800
A060A0070/40	250	500	3980	2375	1900	1045	900

*OIL VISCOSITY CONSIDERED 7-8 CST @WORKING TEMPERATURE

Veeraja Industries
solutions@veeraja.com | +91 7350771200

DESCRIPTION	SPECIFICATION
GEAR BOX	PLANETORY / WORM WHEEL
MOTOR	0.18KW, 415V 50HZ 3PHASE AC SUPPLY. STD. MAKE
PNEUMATIC	FESTO MAKE
ALL FLANGES PCD	AS PER ASA 150
SUPPLY PUMPS AVAILABLE	VERTICAL / HORIZONTAL PUMPS. MOTOR POWER MAY DIFFER FROM MODEL TO MODEL
PAPER WIDTH (MM)	1000

Contact us:

Veeraja Industries
Regd Office & Works: 78/1, Shantiban Industrial Estate, Shivane, Pune – 411023, Maharashtra, India.
E-mail: solutions@veeraja.com
Centralized Filtration Systems: +91 7350771200
Skimmers & Magnetic Separators: +91 7350771300
Others: +91 9922931696